Centre Scientifique et
Technique du Bâtiment
84 avenue Jean Jaurès
CHAMPS-SUR-MARNE
F-77447 Marne-la-Vallée Cedex 2
Tél. : (33) 01 64 68 82 82
Fax : (33) 01 60 05 70 37

Autorisé et notifié conformément à l'article 10 de la directive 89/106/EEC du Conseil, du 21 décembre 1988, relative au rapprochement des dispositions législatives, réglementaires et administratives des Etats membres concernant les produits de construction.

CSTB
le futur en construction

MEMBRE DE L'EOTA

European Technical Approval ETA-10/0145

(English language translation, the original version is in French language)

Nom commercial : **Trade name:**	**Powers DM-PRO**
Titulaire : **Holder of approval:**	**Powers Fasteners Europe** **Stanley Black&Decker Deutschland GmbH** **Black-&-Decker Str. 40** **65510 Idstein** **Germany**
Type générique et utilisation prévue du produit de construction : **Generic type and use of construction product:**	Cheville à expansion à déformation controlée en acier galvanisé ou inoxydable de dimensions **M6, M8, M10 et M12** pour usage multiple et pour applications non structurelles dans du béton. **Deformation controlled expansion anchor made of galvanized or stainless steel of sizes M6, M8, M10 and M12 for multiple use for non structural application in concrete**
Validité du : au : **Validity from / to:**	**01/02/2013** **31/01/2018**
Usine de fabrication : **Manufacturing plant:**	**Plant 1**
Le présent Agrément technique européen contient : **This European Technical Approval contains:**	12 pages incluant 5 annexes faisant partie intégrante du document. **12 pages including 5 annexes which form an integral part of the document.**

This European Technical Approval replaces ETA-10/0145 with validity from 07/06/2010 to 07/06/2015
Cet Agrément Technique Européen remplace l'Agrément ETA-10/0145 valide du 07/06/2010 to 07/06/2015

I LEGAL BASES AND GENERAL CONDITIONS

1. This European Technical Approval is issued by the Centre Scientifique et Technique du Bâtiment in accordance with:

   - Council Directive 89/106/EEC of 21 December 1988 on the approximation of laws, regulations and administrative provisions of Member States relating to construction products[1], modified by the Council Directive 93/68/EEC of 22 July 1993[2] and Regulation (EC) N° 1882/2003 of the European Parliament and of the Council [3];
   - Décret n° 92-647 du 8 juillet 1992[4] concernant l'aptitude à l'usage des produits de construction;
   - Common Procedural Rules for Requesting, Preparing and the Granting of European Technical Approvals set out in the Annex of Commission Decision 94/23/EC[5];
   - Guideline for European Technical Approval of « Metal Anchors for use in Concrete » ETAG 001, edition 1997, Part 1 « Anchors in general » and Part 6 « Anchors for multiple use for non structural applications».

2. The Centre Scientifique et Technique du Bâtiment is authorised to check whether the provisions of this European Technical Approval are met. Checking may take place in the manufacturing plant (for example concerning the fulfilment of assumptions made in this European Technical Approval with regard to manufacturing). Nevertheless, the responsibility for the conformity of the products with the European Technical Approval and for their fitness for the intended use remains with the holder of the European Technical Approval.

3. This European Technical Approval is not to be transferred to manufacturers or agents of manufacturer other than those indicated on page 1; or manufacturing plants other than those indicated on page 1 of this European Technical Approval.

4. This European Technical Approval may be withdrawn by the Centre Scientifique et Technique du Bâtiment pursuant to Article 5 (1) of the Council Directive 89/106/EEC.

5. Reproduction of this European Technical Approval including transmission by electronic means shall be in full. However, partial reproduction can be made with the written consent of the Centre Scientifique et Technique du Bâtiment. In this case partial reproduction has to be designated as such. Texts and drawings of advertising brochures shall not contradict or misuse the European Technical Approval.

6. The European Technical Approval is issued by the approval body in its official language. This version corresponds to the version circulated within EOTA. Translations into other languages have to be designated as such.

---

1 Official Journal of the European Communities n° L 40, 11.2.1989, p. 12
2 Official Journal of the European Communities n° L 220, 30.8.1993, p. 1
3 Official Journal of the European Union n° L 284, 31.10.2003, p. 25
4 Journal officiel de la République française du 14 juillet 1992
5 Official Journal of the European Communities n° L 17, 20.1.1994, p. 34

II SPECIFIC CONDITIONS OF THE EUROPEAN TECHNICAL APPROVAL

1 Definition of product and intended use

1.1. Definition of product

The Powers DM-PRO anchor of sizes M6x25, M8x30, M10x40 and M12x50 is an anchor made of galvanized steel or stainless steel, which is placed into a drilled hole and anchored by deformation-controlled expansion.
The anchor consist of an expansion sleeve and an internal plug
For the installed anchor see Figure given in Annex 1.
The fixture shall be anchored with a fastening screw or threaded rod according to Annex 2

1.2. Intended use

The anchor is intended to be used for anchorages for which requirements for safety in use in the sense of the Essential Requirements 4 of Council Directive 89/106/EEC shall be fulfilled and failure of the fixture represent an immediate risk to human life.

The anchor is to be used only for multiple use for non-structural applications. The definition of multiple use according to the member States is given in the informative Annex 1 of ETAG 001, Part 6.

The anchor may be used for anchorages with requirements related to resistance to fire.

The anchor is to be used only for anchorages subject to static or quasi-static loading in reinforced or unreinforced normal weight concrete of strength classes C20/25 minimum to C50/60 maximum according to ENV 206-1: 2000-12. It may be anchored in cracked or non-cracked concrete.

<u>Anchor made of galvanized steel</u>

The anchor made of galvanized steel may only be used in structures subject to dry internal conditions.

<u>Anchor made of stainless steel</u>

The anchor made of stainless steel may be used in concrete subject to dry internal conditions and also in concrete subject to external atmospheric exposure (including industrial and marine environment), or exposure in permanently damp internal conditions, if no particular aggressive conditions exist. Such particular aggressive conditions are e.g. permanent, alternating immersion in seawater or the splash zone of seawater, chloride atmosphere of indoor swimming pools or atmosphere with extreme chemical pollution (e.g. in desulphurization plants or road tunnels where de-icing materials are used).

The provisions made in this European Technical Approval are based on an assumed intended working life of the anchor of 50 years. The indications given on the working life cannot be interpreted as a guarantee given by the producer, but are to be regarded only as a means for choosing the right products in relation to the expected economically reasonable working life of the works.

2 Characteristics of product and methods of verification

2.1. Characteristics of product

The Powers DM-PRO anchor corresponds to the drawings and provisions given in Annexes 1 to 2. The characteristic material values, dimensions and tolerances of the anchor not indicated in Annex 2 shall correspond to the respective values laid down in the technical documentation[6] of this European Technical Approval.

---

[6] The technical documentation of this European Technical Approval is deposited at the Centre Scientifique et Technique du Bâtiment and, as far as relevant for the tasks of the approved bodies involved in the attestation of conformity procedure, is handed over to the approved bodies.

Regarding the requirement concerning safety in case of fire it is assumed that the anchor meets the requirements of class A1 in relation to reaction to fire in accordance with the stipulations of the commission decision 96/603/EC, amended by 2000/605/EC.

The characteristic values for the design of anchorages are given in Annexe 4.

The characteristic values for the design of anchorages regarding resistance to fire are given in Annexe 5. They are valid for use in a system that is required to provide a specific fire resistance class.

Each anchor is marked with the identifying mark of the producer according to Annex 2.

The anchor shall only be packaged and supplied as a complete unit.

2.2. Methods of verification

The assessment of fitness of the anchor for the intended use in relation to the requirements for safety in use in the sense of the Essential Requirements 4 has been made in accordance with the « Guideline for European Technical Approval of Metal Anchors for use in Concrete », Part 1 « Anchors in general » and Part 6 « Anchors for multiple use for non-structural applications »,.

The assessment of the anchor for the intended use in relation to the requirements for resistance to fire has been made in accordance with the Technical Report TR 020 ”Evaluation of anchorages in concrete concerning resistance to fire”.

In addition to the specific clauses relating to dangerous substances contained in this European technical approval, there may be other requirements applicable for the products falling within its scope (e.g. transposed European legislation and national laws, regulations and administratives provisions). In order to meet the provisions of the Construction Product Directive, these requirements need also to be complied with, when and where they apply.

3 Evaluation of Conformity and CE marking

3.1. Attestation of conformity system

The system of attestation of conformity 2 (ii) (referred to as system 2+) according to Council Directive 97/161/EG laid down by the European Commission provides:

a) tasks for the manufacturer:

1. initial type-testing of the product,
2. factory production control,
3. further testing of samples taken at the factory by the manufacturer in accordance with a prescribed test plan.

b) tasks for the approved body:

4. initial inspection of factory and of factory production control,
5. continuous surveillance, assessment and approval of factory production control.

3.2. Responsibilities

3.2.1. Tasks of the manufacturer

3.2.1.1 Factory production control

The manufacturer shall have a factory production control system in the plant and shall exercise permanent internal control of production. All the elements, requirements and provisions adopted by the manufacturer are documented in a systematic manner in the form of written policies and procedures. This production control system ensures that the product is in conformity with this European Technical Approval.
The manufacturer shall only use raw materials supplied with the relevant inspection documents as laid down in the prescribed test plan[7]. The incoming raw materials shall be subject to controls and tests by the manufacturer before acceptance. Check of incoming materials shall include

[7] The prescribed test plan has been deposited at the Centre Scientifique et Technique du Bâtiment and is handed over only to the approved bodies involved in the conformity attestation procedure.

control of the inspection documents presented by suppliers (comparison with nominal values) by verifying dimension and determining material properties.
The frequency of controls and tests conducted during production and on the assembled anchor is laid down in the prescribed test plan taking account of the automated manufacturing process of the anchor.
The results of factory production control are recorded and evaluated in accordance with the prescribed test plan.
The records shall be presented to the inspection body during the continuous surveillance. On request, they shall be presented to the Centre Scientifique et Technique du Bâtiment.
Details of the extent, nature and frequency of testing and controls to be performed within the factory production control shall correspond to the prescribed test plan which is part of the technical documentation of this European Technical Approval.

3.2.1.2 Other tasks of the manufacturer

The manufacturer shall, on the basis of a contract, involve a body which is approved for the tasks referred to in section 3.1 in the field of anchors in order to undertake the actions laid down in section 3.2.2. For this purpose, the control plan referred to in section 3.2.1.1 and 3.2.2 shall be handed over by the manufacturer to the approved body involved.

The manufacturer shall make a declaration of conformity, stating that the construction product is in conformity with the provisions of this European technical approval.

3.2.2. Tasks of approved bodies

3.2.2.1. Initial inspection of factory and of factory production control

The approved body shall ascertain that, in accordance with the prescribed test plan, the factory and the factory production control are suitable to ensure continuous and orderly manufacturing of the anchor according to the specifications mentioned in 2.1. as well as to the Annexes to the European Technical Approval.

The approved certification body involved by the manufacturer shall issue an EC certificate of conformity of the product stating the conformity with the provisions of this European technical approval.

3.2.2.2. Continuous surveillance

The approved body shall visit the factory at least once a year for routine inspection. It has to be verified that the system of factory production control and the specified automated manufacturing process are maintained taking account of the prescribed test plan.

Continuous surveillance and assessment of factory production control have to be performed according to the prescribed test plan.

The results of product certification and continuous surveillance shall be made available on demand by the certification body or inspection body, respectively, to the Centre Scientifique et Technique du Bâtiment. In cases where the provisions of the European Technical Approval and the prescribed test plan are no longer fulfilled the conformity certificate shall be withdrawn and inform CSTB without delay.

3.3. CE-Marking

The CE marking shall be affixed on each packaging of anchors. The symbol « CE » shall be accompanied by the following information:

- Commercial name;
- Name or identifying mark of the producer and manufacturing plant;
- Name of approval body and ETA number;
- Identification number of the certification body;
- Number of the EC certificate of conformity;
- Use category (ETAG 001-6);
- The last two digits of the year in which the CE-marking was affixed;

- Size.

4 Assumptions under which the fitness of the product for the intended use was favourably assessed

4.1. Manufacturing

The anchor is manufactured in accordance with the provisions of the European Technical Approval using the automated manufacturing process as identified during inspection of the plant by the Centre Scientifique et Technique du Bâtiment and the approved body and laid down in the technical documentation. Changes to the product or production process, which could result in the deposited data/information being incorrect, should be notified to the CSTB before the changes are introduced. CSTB will decided whether or not such changes affect the approval and consequently the validity of the CE marking on the basis of the approval and if so whether further assement or alterations to the approval shall be necessary.

4.2. Installation

4.2.1. Design of anchorages

The fitness of the anchors for the intended use is given under the following conditions:

The anchorages are designed in accordance with the « Guideline for European Technical Approval of Metal Anchors for Use in Concrete », Annex C, Method C, under the responsibility of an engineer experienced in anchorages and concrete work.

The anchor is to be used only for multiple use for non structural applications, the definition of multiple use according to the member states is given in the informative Annex 1 of ETAG 001 part 6.

Verifiable calculation notes and drawings are prepared taking account of the loads to be anchored.

The position of the anchor is indicated on the design drawings (e.g. position of the anchor relative to reinforcement or to support, etc.).

The design of the fixture is such that in case of excessive slip or failure of one anchor the load can be transmitted to neighbouring anchors.

The design of anchorages under fire exposure has to consider the conditions given in the Technical Report TR 020 “Evaluation of anchorages in concrete concerning resistance to fire”. The relevant characteristics values are given in Annex 4, Table 5. The design method covers anchors with fire attack from one side only. If the fire attack is from more than one side, the design method may be taken only if the edge distance of the anchor is $c \geq 300$ mm.

4.2.2. Installation of anchors

The fitness for use of the anchor can only be assumed if the anchor is installed as follows:

- anchor installation carried out by appropriately qualified personnel and under the supervision of the person responsible for technical matters on the site;
- use of the anchor only as supplied by the manufacturer without exchanging the components of an anchor;
- anchor installation in accordance with the manufacturer’s specifications and drawings prepared for that purpose and using the appropriate tools;
- checks before placing the anchor to ensure that the strength class of the concrete in which the anchor is to be placed is in the range given and is not lower than that of the concrete to which the characteristic loads apply;
- check of concrete being well compacted, e.g. without significant voids;
- positioning of the drill holes without damaging the reinforcement;
- clearing the hole of drilling dust;
- keeping of the edge distance and spacing to the specified values without minus tolerances;

- in case of aborted hole: new drilling at a minimum distance away of twice the depth of the aborted hole or smaller distance if the aborted drill hole is filled with high strength mortar and if under shear or oblique tension load it is not to the anchor in the direction of load application;
- Anchor installation such that the effective anchorage depth is complied with. This compliance is ensured, if the thickness of fixture is not greater than the maximum thickness of fixture given in this ETA;
- Anchor expansion by impact on the cone using the manual setting tool described in Annex 3. The anchor is properly set if either the stop of the pin reachs the expansion sleeve or the impression of the setting tool for marking is visible as illustrated in Annex 3.
- The fastening screw or threaded rod shall correspond to the requirement given in Annex 2
- Fixing the screw with the recommended torque moment given in Annex 4 using a calibrated torque wrench.

4.2.3. Responsibility of the manufacturer

It is the manufacturer's responsibility to ensure that the information on the specific conditions according to 1 and 2 including Annexes referred to as well as in sections 4.2.1. and 4.2.2. is given to those who are concerned. This information may be made by reproduction of the respective parts of the European Technical Approval. In addition all installation data shall be shown clearly on the package and/or on an enclosed instruction sheet, preferably using illustration(s).

The minimum data required are:
- drill bit diameter,
- thread diameter,
- minimum embedment depth,
- minimum hole depth,
- available thread length and minimum screwing depth of the fastening or threaded rod,
- torque moment,
- minimum strength class of the screw or threaded rod according to EN ISO 898-1,
- information on the installation procedure, including cleaning of the hole, preferably by means of an illustration,
- reference to any special installation equipment needed,
- identification of the manufacturing batch.

All data shall be presented in a clear and explicit form.

The original French version is signed by

Le Directeur Technique
C.BALOCHE

Powers Drop-in anchor DM-PRO:

General working principle of a drop in anchor

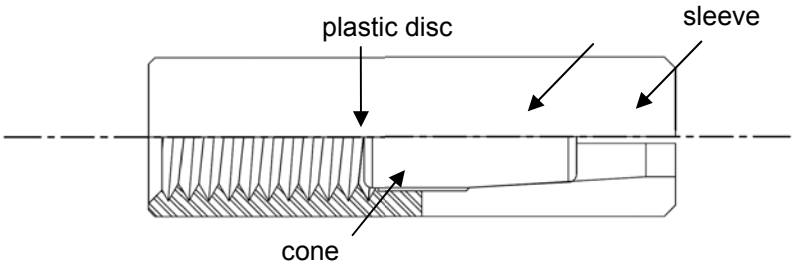

Marking of the sleeve: e.g. “DM-PRO M8”

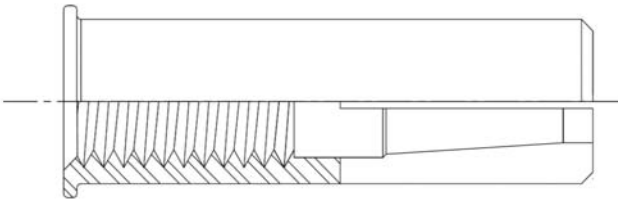

Anchor in use:

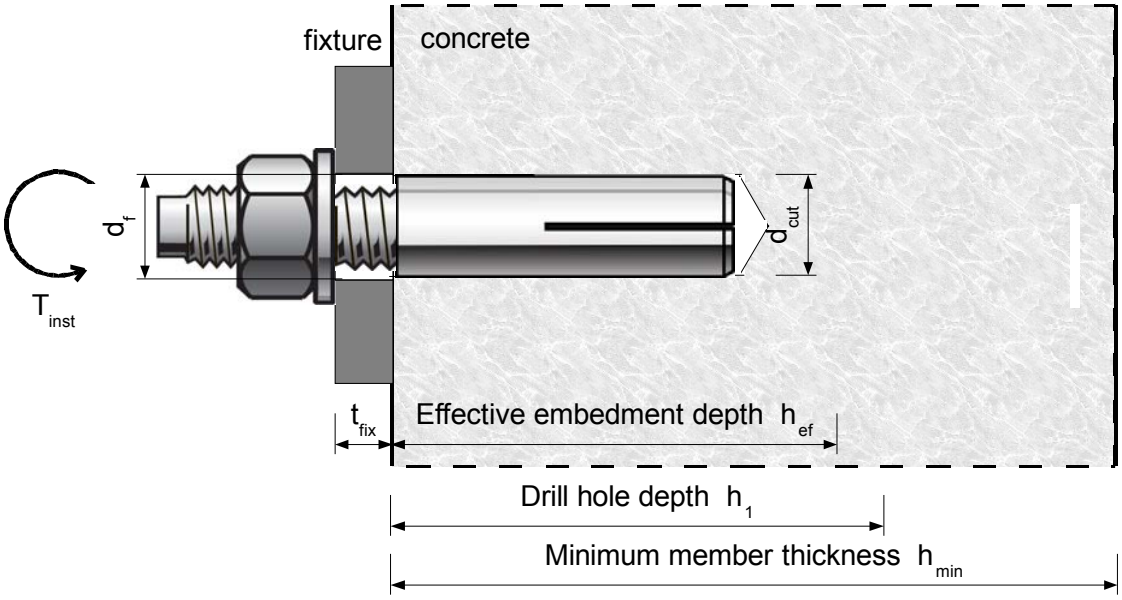

Intended use:

- Only for multiple use for non-structural applications
- Anchorages with requirements related to resistance to fire
- DM-PRO / DM-Lip-PRO : Use in dry internal conditions
- DM-SS-PRO : Use in dry internal conditions or external atmospheric exposure

POWERS DROP-IN ANCHOR DM-PRO displacement-controlled expansion anchor DMPRO	Annex 1 of European Technical Approval ETA-10/0145
Product and intended use	

Different anchor versions and different parts of the anchor:

Anchor sleeve

Drop-in anchor

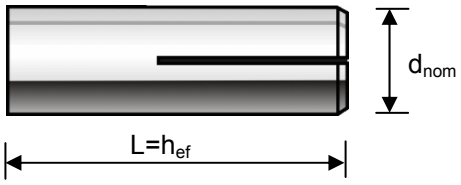

Expansion cone

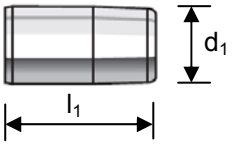

Lipped drop-in anchor

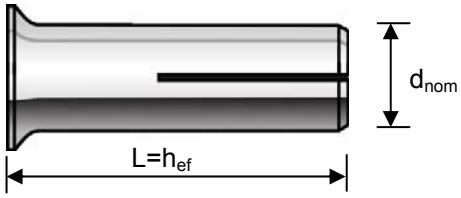

Table 1: Materials

Part	Designation	Product	Material	Protection
1	Anchor sleeves	DM-PRO / DM-Lip-PRO	Cold formed steel, grade SWRCH8A	Zinc plated 5 µm
		DM-SS-PRO	Machined steel, grade SS316	-
2	Expansion cones	DM-PRO / DM-Lip-PRO	Cold formed steel, grade SWRCH8A	Zinc plated 5 µm
		DM-SS-PRO	Machined steel, grade SS316 (1.4401, 1.4404, 1.4439, 1.4571, A4 steel)	-
3	Screw or threaded rod for fastening	DM-PRO / DM-Lip-PRO	Steel strength class 4.6, 5.6, 5.8 or 8.8 according to ISO898-1	Zinc plated 5 µm
		DM-SS-PRO	Steel strength class A4-70 (1.4401, 1.4404, 1.4439, 1.4571)	-

Table 2: Anchor dimensions

			M6	M8	M10	M12
Length sleeve	**$L= h_{ef}$**	**[mm]**	25	30	40	50
Nom. diameter	**d_{nom}**	**[mm]**	8	10	12	16
Cone diameter	**d_1**	**[mm]**	4,8	5,7	7,4	9,7
Cone length	**l_1**	**[mm]**	10	12	16	21

Fastening screw or threaded rod :
For anchors made of galvanized steel minimum property class is 4.6, 5.6 or 8.8 acc. to EN ISO 898-1
For anchors made of stainless steel minimum property class is A4-70 acc. to EN ISO 3506.

The length of the fastening screw shall be determined depending on thickness of fixture t_{fix}, admissible tolerance and available thread length l_{smax} as well as minimum screwing length l_{smin}

Drop-in anchor setting tool:

Basic version without marking function DM-ST

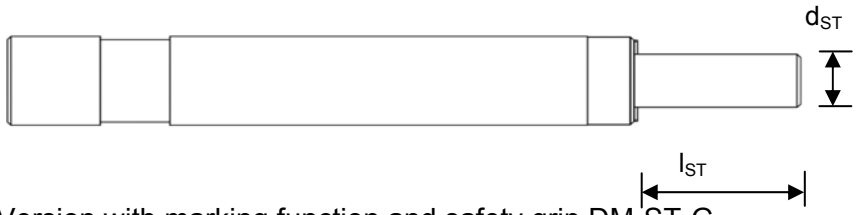

Version with marking function and safety grip DM-ST-G

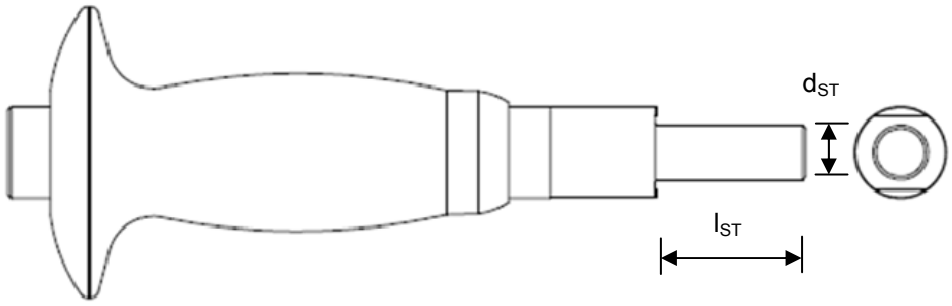

The setting tool with marking function produces with correct installation a mark on the collar of the drop in anchor. This mark enables to check after installation the correct expansion of the product.

Table 3: Dimensions setting tool

			M6	M8	M10	M12
Diameter setting tool	d_{ST}	**[mm]**	4,6	6,4	7,9	9,6
Length setting pin	l_{ST}	**[mm]**	15	18	24	29

Table 4: Installation data

			M6	M8	M10	M12
Drill hole diameter	d_{cut}	[mm]	≤ 8,45	≤ 10,45	≤ 12,5	≤ 16,5
Drill hole depth	h_1	[mm]	26	32	42	53
Embedment depth	h_{ef}	[mm]	25	30	40	50
Installation torque	T_{inst}	[Nm]	4	8	15	35
Dia. through hole fixture	d_f	[mm]	7	9	12	14
Min. screw in length	l_{smin}	[mm]	6	8	10	12
Thread length	l_{smax}	[mm]	11	13	17	22
Design method C						
For minimum spacing and minimum edge distances						
Min. member thickness	h_{min}	[mm]	80	120	130	160
Minimum edge distance	c_{cr}	[mm]	150	130	170	200
Minimum spacing	s_{cr}	[mm]	200	100	120	160
For minimum thickness of concrete member						
Min. member thickness	h_{min}	[mm]	80	80	80	100
Minimum edge distance	c_{cr}	[mm]	150	150	150	150
Minimum spacing	s_{cr}	[mm]	200	200	200	200

Table 5: Characteristic values for all loading directions, C20/25 to C50/60

			M6	M8	M10	M12
Design method C						
Char. resistance in C20/25 to C50/60	F^0_{Rk}	[kN]	2,0	2,0	4,0	5,0
Partial safety factor	γ_M [1)]	[-]	2,4[2)]	2,3[2)]	2,1[2)]	2,1[2)]
Design resistance	F_{Rd}	[kN]	0,83	0,87	1,90	2,38
Steel failure with lever arm (shear)						
Characteristic resistance, steel grade 4.6	$M^0_{Rk,s}$	[Nm]	6,1	14,9	29,9	52,4
Partial safety factor	γ_{Ms} [1)]	[-]	1,67			
Characteristic resistance steel grade 5.6	$M^0_{Rk,s}$	[Nm]	7,6	18,7	37,3	65,5
Partial safety factor	γ_{Ms} [1)]	[-]	1,67			
Characteristic resistance steel grade 8.8	$M^0_{Rk,s}$	[Nm]	12,2	27,3	43,0	104,8
Partial safety factor	γ_{Ms} [1)]	[-]	1,25			
Characteristic resistance steel grade A4-70	$M^0_{Rk,s}$	[Nm]	10,7	26,2	52,3	91,7
Partial safety factor	γ_{Ms} [1)]	[-]	1,56			

[1)] In absence of other national regulations
[2)] The value contains an installation safety factor γ_2= 1,4

Anchor suitable for cracked concrete only for <u>multiple use</u> for non structural applications(redundant systems)!

For the definition of redundant systems please consider ETAG 001, part 6, Annex 1 (informative)

Size M6 is suitable for internal exposure only

POWERS DROP-IN ANCHOR DM-PRO displacement-controlled expansion anchor DMPRO	Annex 4
Installation parameters and Design method C, characteristic values for all loading directions	of European Technical Approval ETA-10/0145

Table 6: Design method C- characteristic values under fire exposure for all loading directions, C20/25 to C50/60

				M6	M8	M10	M12
Design method C (steel ≥ 4.6)							
Characteristic resistance[1)]	R30	$F^0_{Rk,fi}$	[kN]	-	0,30	0,57	1,25
Characteristic resistance[1)]	R60	$F^0_{Rk,fi}$	[kN]	-	0,27	0,50	1,25
Characteristic resistance[1)]	R90	$F^0_{Rk,fi}$	[kN]	-	0,21	0,38	1,10
Characteristic resistance[1)]	R120	$F^0_{Rk,fi}$	[kN]	-	0,15	0,31	0,84
Design method C (steel ≥ A4-70)							
Characteristic resistance[1)]	R30	$F^0_{Rk,fi}$	[kN]	-	0,50	0,96	1,25
Characteristic resistance[1)]	R60	$F^0_{Rk,fi}$	[kN]	-	0,48	0,77	1,25
Characteristic resistance[1)]	R90	$F^0_{Rk,fi}$	[kN]	-	0,36	0,61	1,25
Characteristic resistance[1)]	R120	$F^0_{Rk,fi}$	[kN]	-	0,30	0,54	1,00
Characteristic distances (R30- R120)							
Characteristic spacing		$s_{cr,fi}$	[mm]	-	120	160	200
Characteristic edge distance		$c_{cr,fi}$	[mm]	-	60	80	100
Steel failure with lever arm (steel ≥ 4.6)							
Characteristic resistance	R30	$M^0_{Rk,s}$	[Nm]	-	0,37	1,12	2,62
Characteristic resistance	R60	$M^0_{Rk,s}$	[Nm]	-	0,34	0,97	1,96
Characteristic resistance	R90	$M^0_{Rk,s}$	[Nm]	-	0,26	0,75	1,70
Characteristic resistance	R120	$M^0_{Rk,s}$	[Nm]	-	0,19	0,60	1,31
Steel failure with lever arm (steel ≥ A4-70)							
Characteristic resistance	R30	$M^0_{Rk,s}$	[Nm]	-	0,75	1,87	3,93
Characteristic resistance	R60	$M^0_{Rk,s}$	[Nm]	-	0,60	1,50	3,27
Characteristic resistance	R90	$M^0_{Rk,s}$	[Nm]	-	0,45	1,20	2,62
Characteristic resistance	R120	$M^0_{Rk,s}$	[Nm]	-	0,37	1,05	2,09

[1)] In absence of other national regulations a partial safety factor for fire exposure of $\gamma_{m,fi}$= 1,0 is recommended.

The edge distance must be larger than 300 mm in case of fire exposure from more than one-sided fire attack.

Size M6 is not suitable for fire exposure